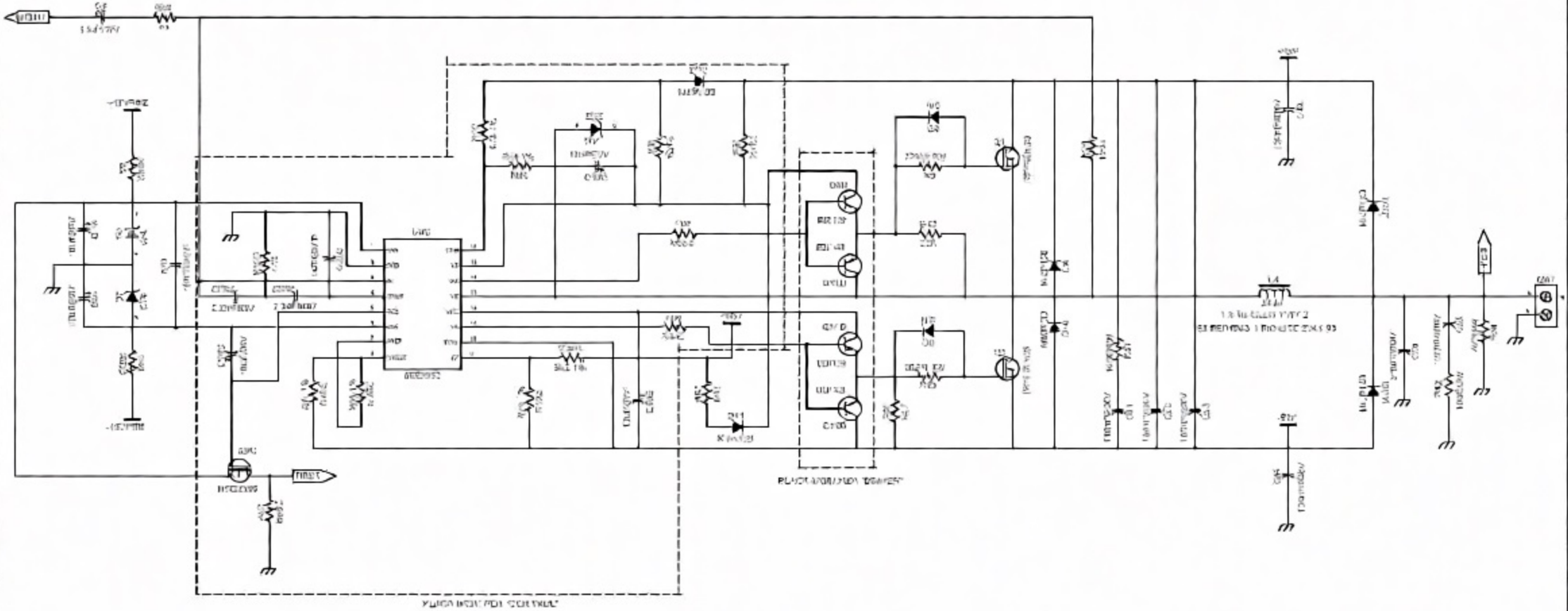

OBS: Curto-circuitar pinos 8 e 12 (IRS2092)

Title	STETSOM ELETRONICA	
Size A2	Number CANAL 1KEH @ 2 OHMS	Rev N/A
Date	Drawn by	
Filename	Sheet 2 of 2	